ISO-CUBE®

ROCKET & LAUNCH PLATFORM TUTORIAL

1.

Ensure that the construction Z-Axis lines are parallel to the edges of the paper.

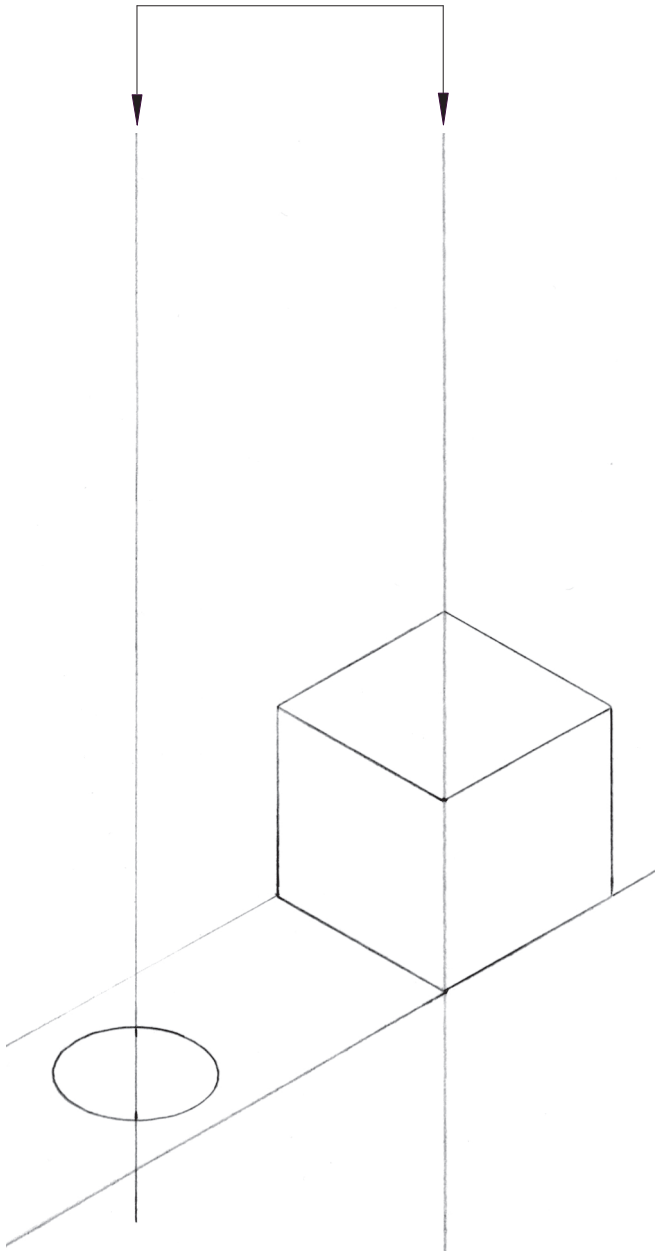

2.

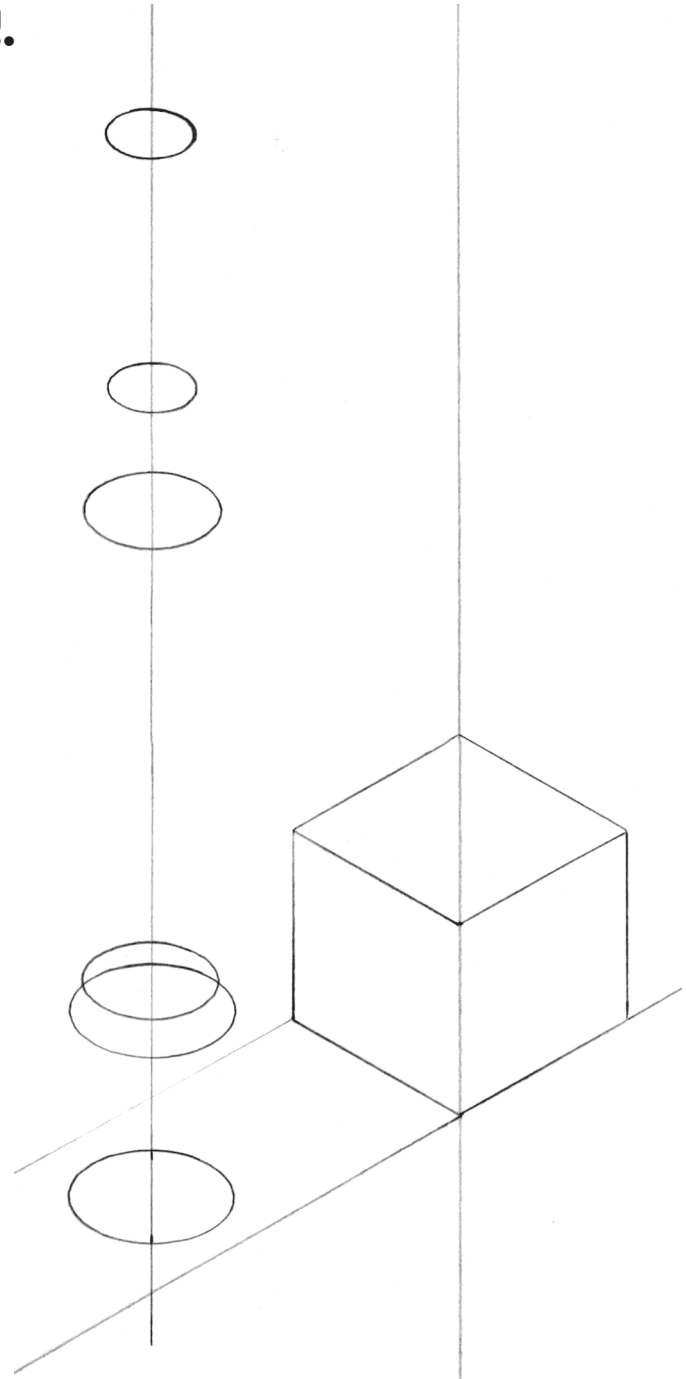

3.

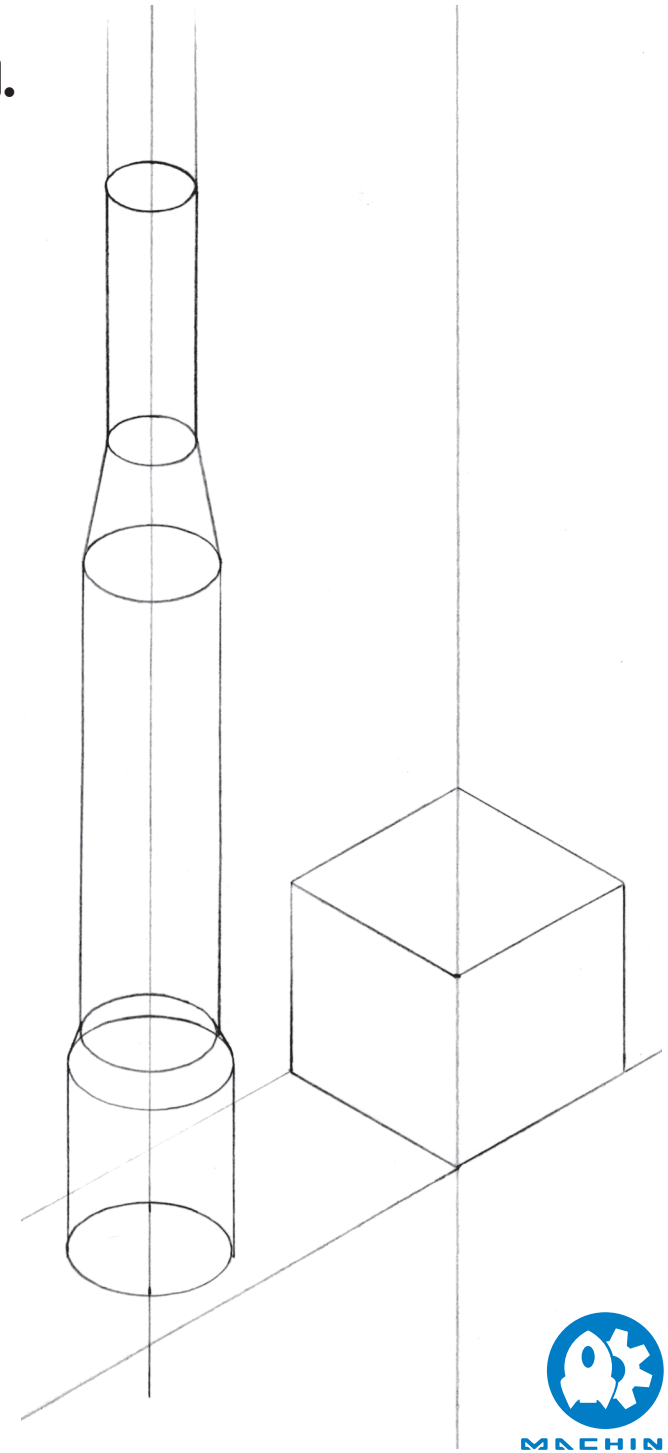

© machine realm® - no part of this document may be reproduced without prior consent of the copyright owner.

MACHINE REALM®

ISO-CUBE®

ROCKET & LAUNCH PLATFORM TUTORIAL

4.

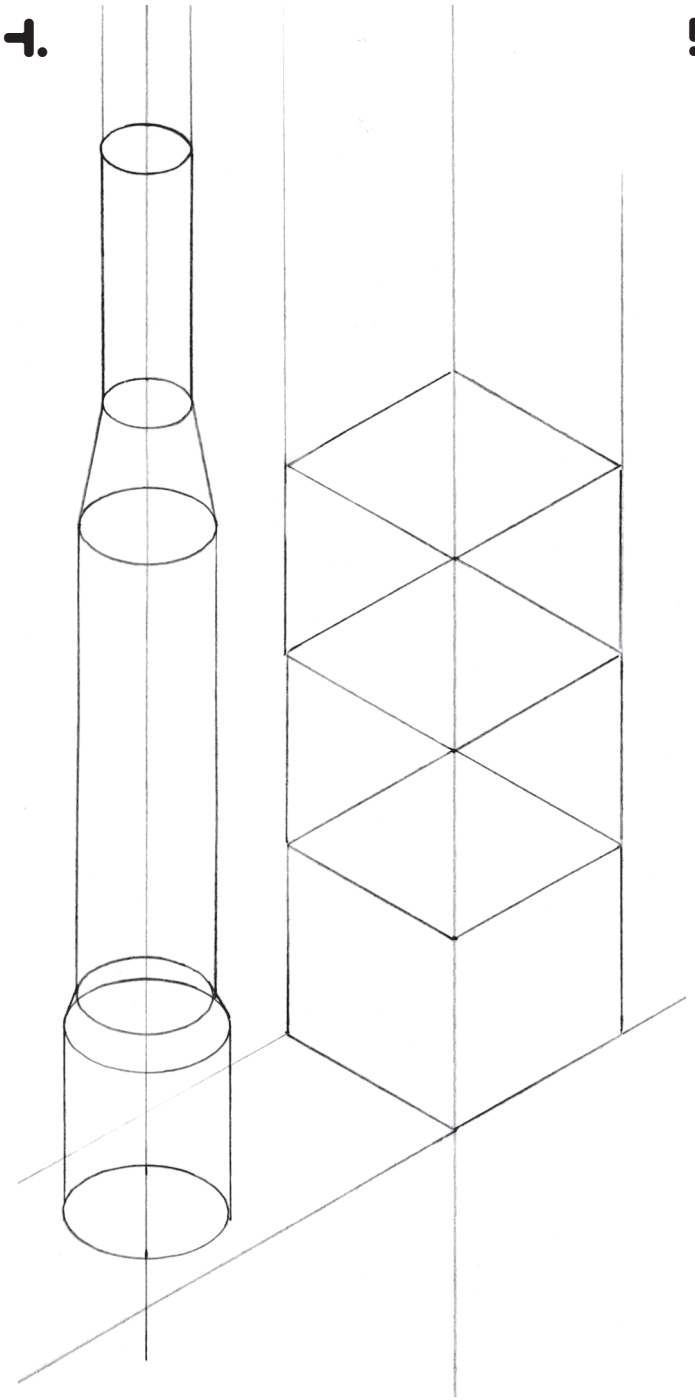

5.

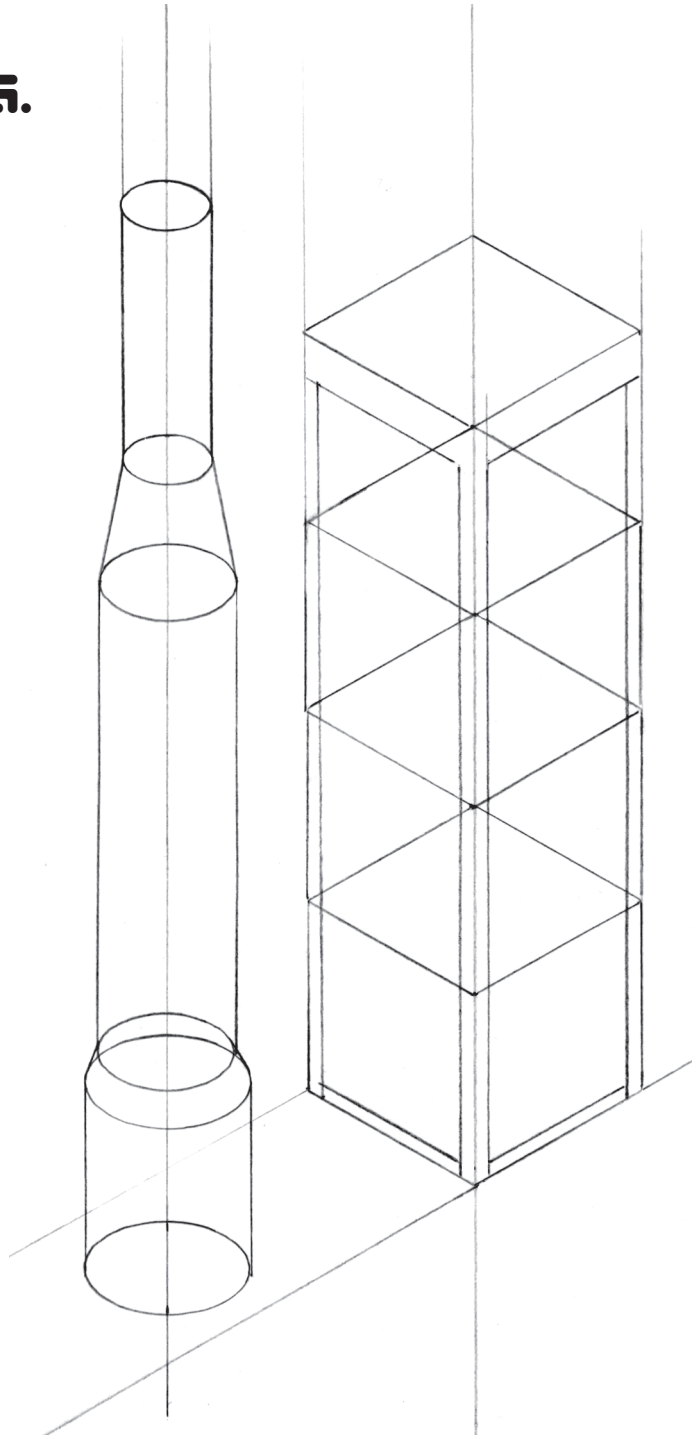

6.

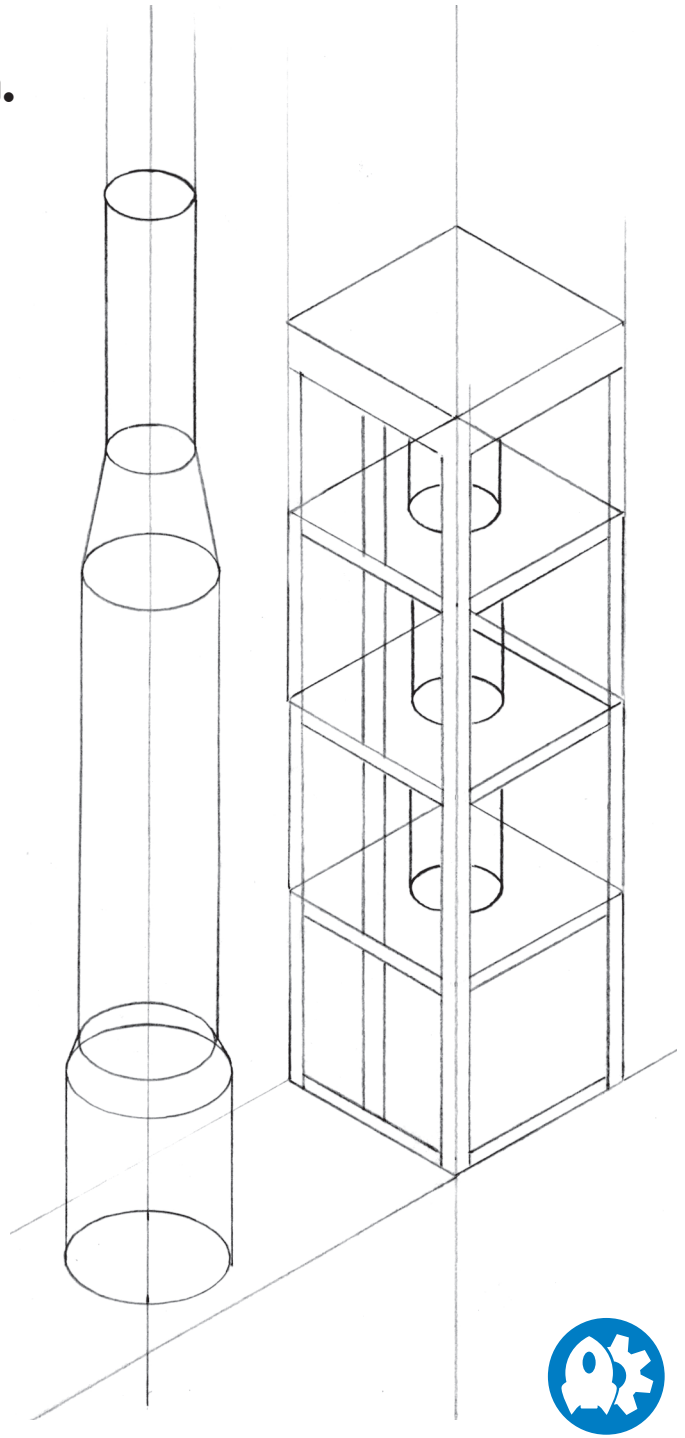

© machine realm® - no part of this document may be reproduced without prior consent of the copyright owner.

MACHINE REALM®

ISO-CUBE®

ROCKET & LAUNCH PLATFORM TUTORIAL

7.

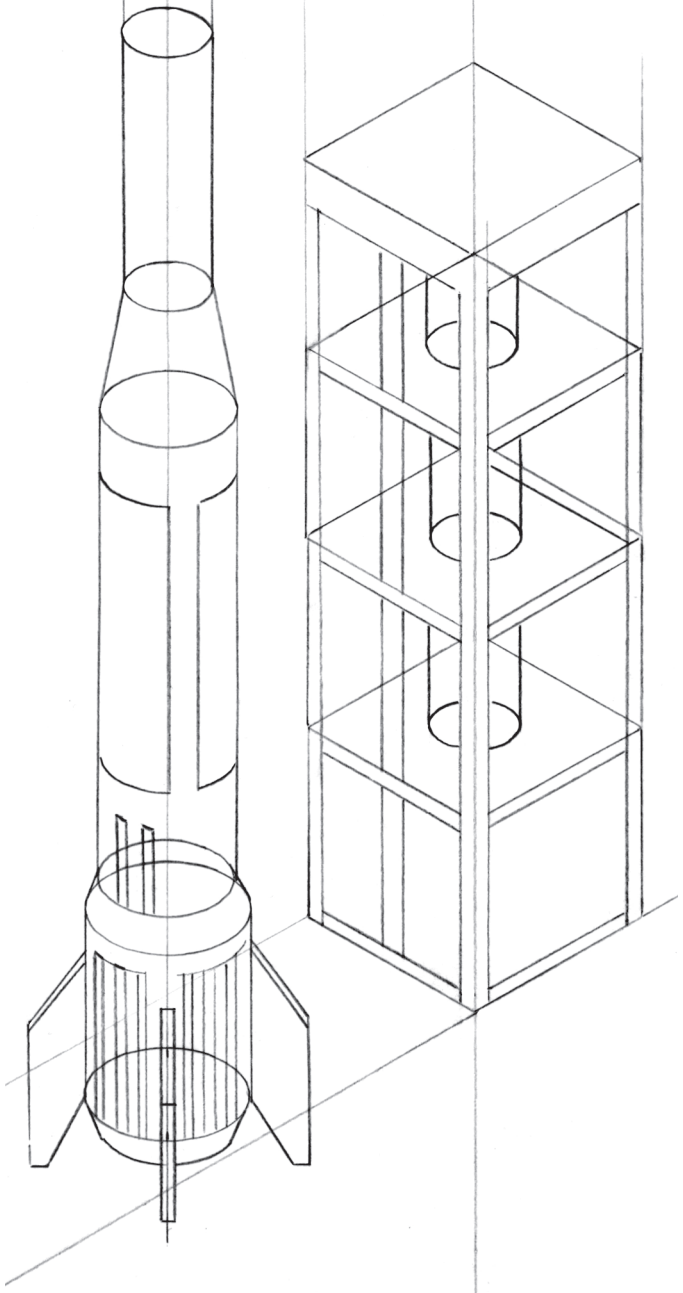

8.

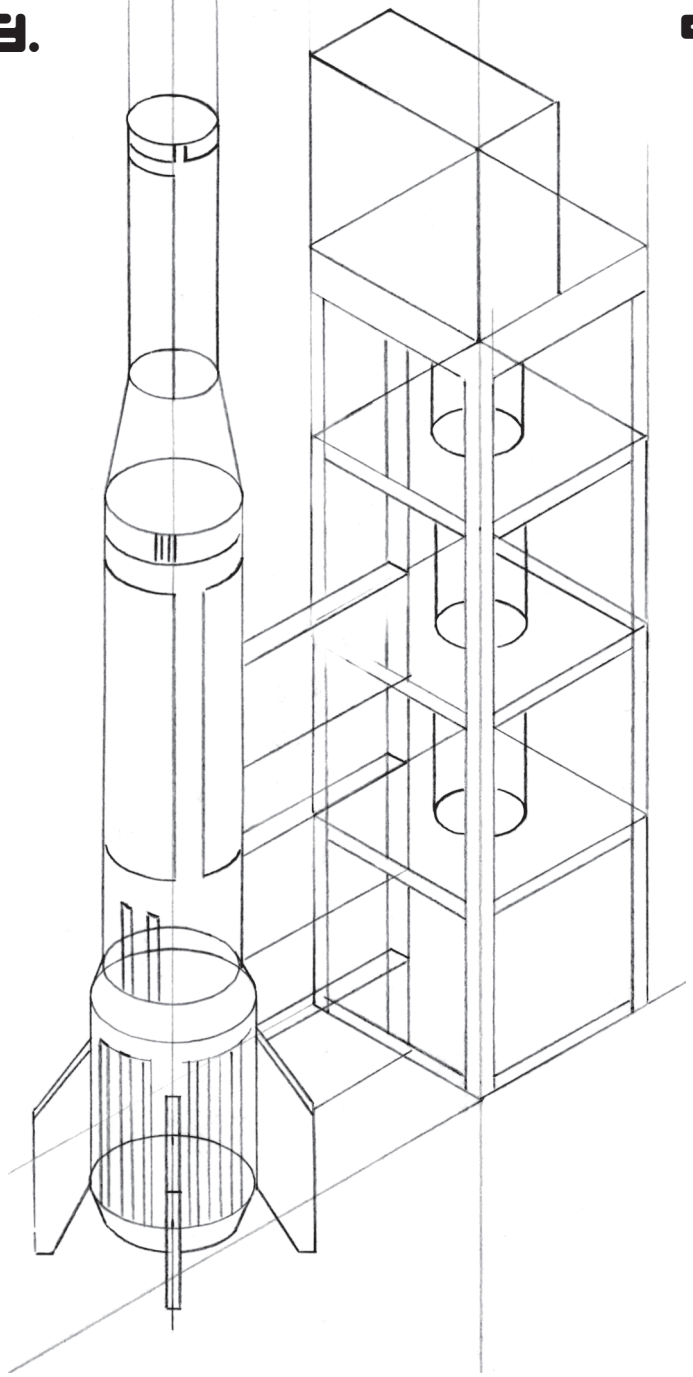

9.

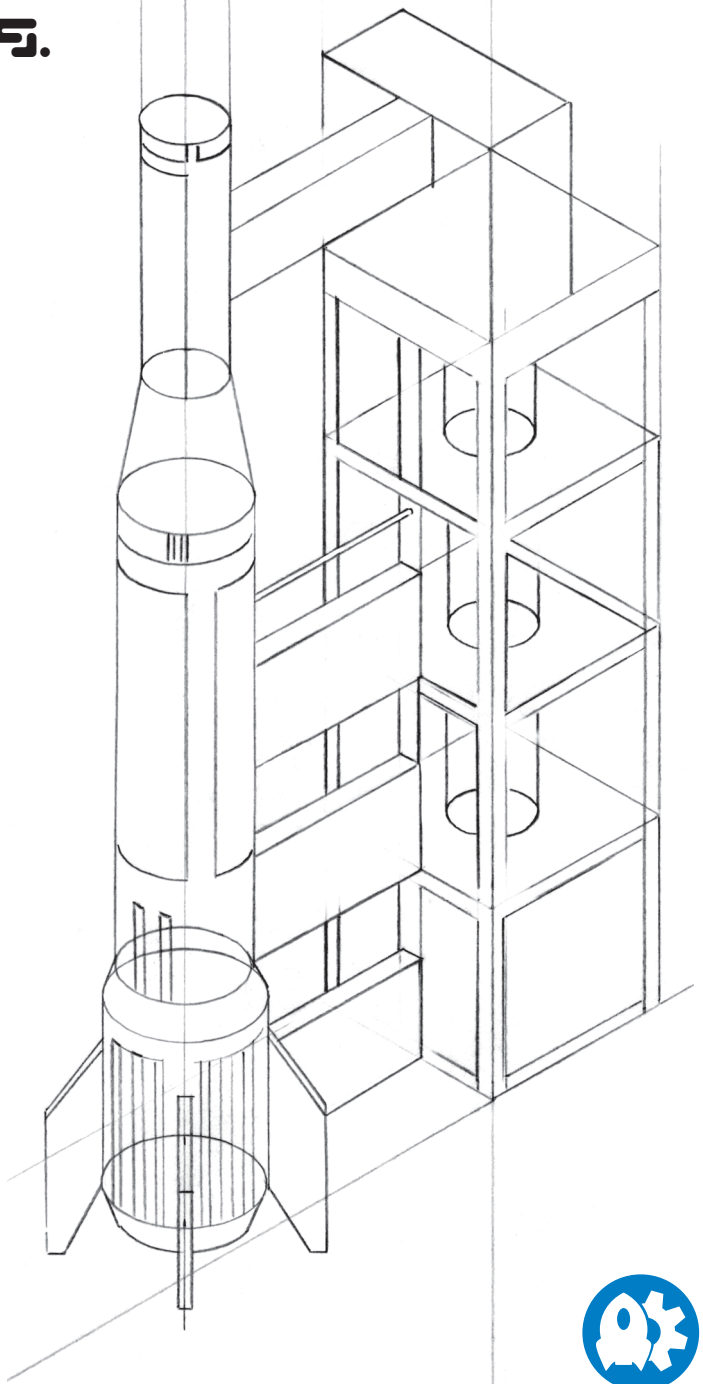

© machine realm® - no part of this document may be reproduced without prior consent of the copyright owner.

MACHINE REALM®

10.

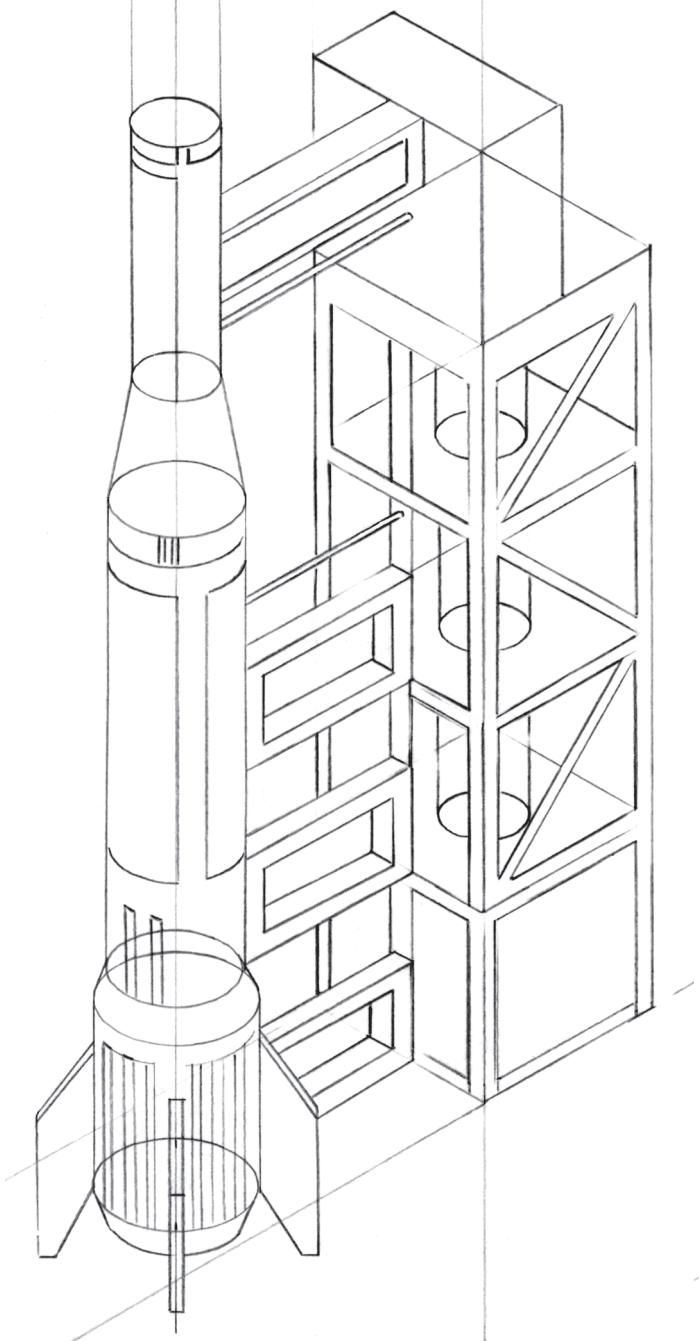

11.

Final Stage: Well Done! Phase 0ne of the Mission complete. Phase two - Add another Rocket!...

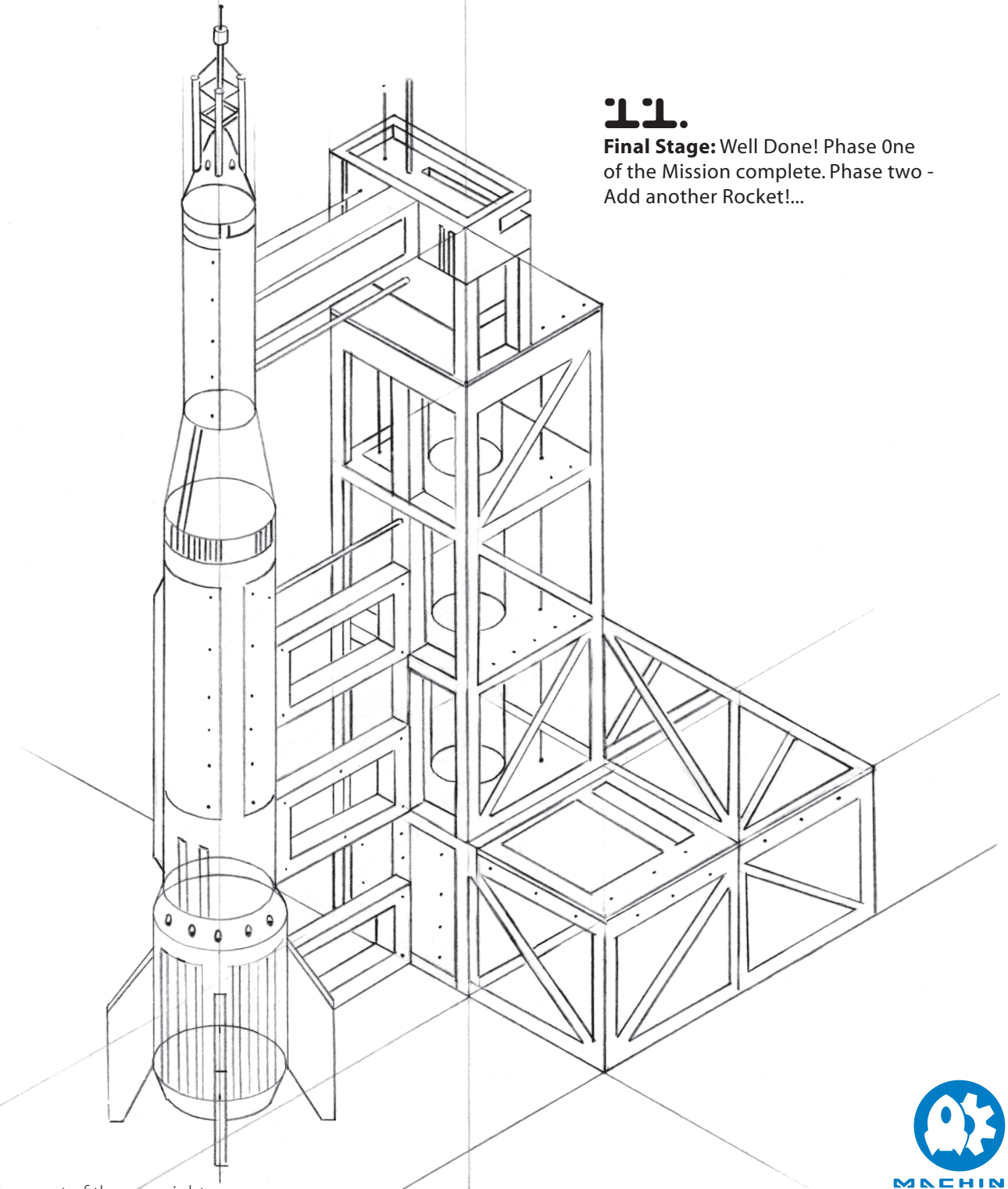

© machine realm® - no part of this document may be reproduced without prior consent of the copyright owner.

MACHINE REALM®